AIRCHARGER® HIGH-FLOW INTAKE KITS

NOT LEGAL FOR SALE OR USE ON ANY POLLUTION CONTROLLED MOTOR VEHICLE IN CALIFORNIA OR STATES ADOPTING CALIFORNIA EMISSION PROCEDURES.

See knfilters.com for CARB status on each part for a specific vehicle

INSTALLATION INSTRUCTIONS

63-6014
NISSAN
2008-12 Pathfinder
2008-15 Xterra
2008-17 Frontier
V6-4.0L

NOTE: This kit was not designed to fit vehicles with a body lift.

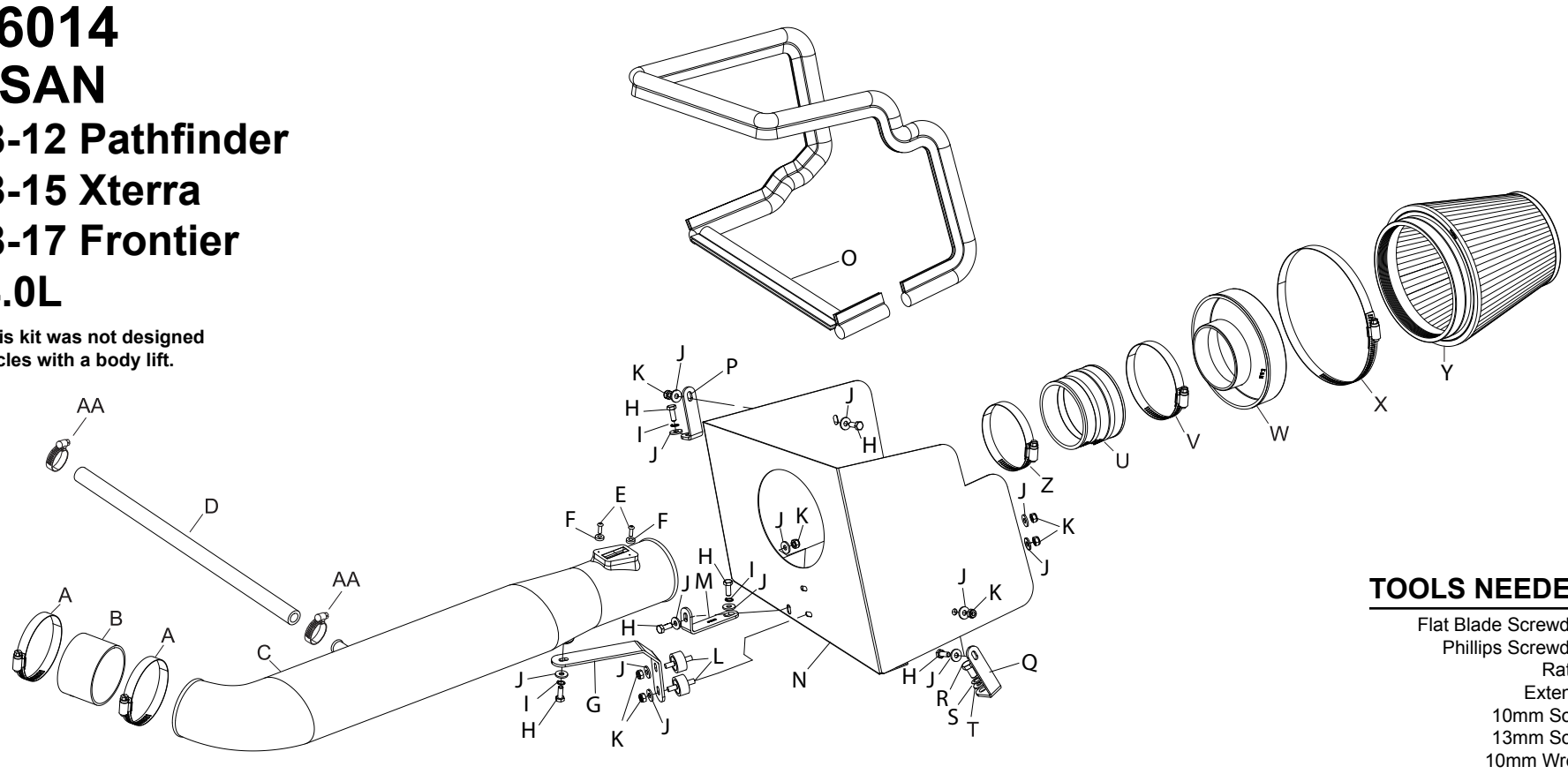

TOOLS NEEDED:

Flat Blade Screwdriver
Phillips Screwdriver
Ratchet
Extension
10mm Socket
13mm Socket
10mm Wrench
Pliers

PARTS LIST:

	Description	Qty.	Part #								
A	Hose Clamp #48	2	08601	J	Washer; 1/4"ID x 5/8"OD Flat	13	08275	S	Washer; 8mm Wave	1	08239
B	Hose Silicone	1	08434	K	Nut; 6mm Nylock	7	07553	T	Washer; 5/16"ID x 5/8"OD Flat	1	08276
C	Intake Tube	1	087177	L	Stud; M6 M/M Rubber MNTD	2	07027	U	Hose; Step Silicone	1	08051
D	Hose; 5/8"id X 17"L	1	5-7017	M	Bracket; Lg. "L"	1	010051	V	Hose Clamp #56	1	08620
E	Screw; M4-.7 x 12mm, B/H/A	2	07726	N	Heat Shield	1	07689	W	Adapter #380	1	21512-1
F	Spacer	2	06503	O	Edge Trim	1	102503	X	Hose Clamp #104	1	08697
G	Bracket	1	070106	P	Bracket; Sm. "L"	1	07805	Y	Air Filter	1	RF-1014
H	Bolt; 6mm-1.00 x 16mm Hex	6	07703	Q	Bracket; Med. "L"	1	070632	Z	Hose Clamp #52	1	08610
I	Washer; 1/4" Lock	3	08198	R	Bolt; 8mm-1.25 x 16mm Hex	1	07844	AA	Hose Clamp #10	2	08411

If you need any assistance please call 1-800-858-3333 to speak with a representative in our Customer Service Center before returning the product.

NOTE: FAILURE TO FOLLOW INSTALLATION INSTRUCTIONS AND NOT USING THE PROVIDED HARDWARE MAY DAMAGE THE INTAKE TUBE, THROTTLE BODY AND ENGINE.

TO START:

1. Turn off the ignition and disconnect the negative battery cable.
NOTE: Disconnecting the negative battery cable erases pre-programmed electronic memories. Write down all memory settings before disconnecting the negative battery cable. Some radios will require an anti-theft code to be entered after the battery is reconnected. The anti-theft code is typically supplied with your owner's manual. In the event your vehicles' anti-theft code cannot be recovered, contact an authorized dealership to obtain your vehicles anti-theft code.

2. Disconnect the mass air sensor electrical connection and unhook the harness from the air box.

3. Remove the two bolts shown, which secure the engine cover.

4. Lift firmly on the engine cover to dislodge it from the mounting grommets, and then remove the cover from the engine as shown.

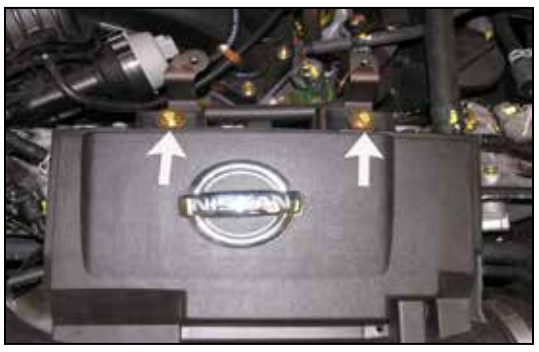

5. Remove the two bolts shown which secure the stock intake tube to the engine.

6. Using pliers, loosen the spring clamp which secures the crank case vent hose to the valve cover and then remove the hose from the valve cover as shown.

7. Loosen the two hose clamps shown which secure the stock intake tube to the air box and to the throttle body.

8. Remove the intake tube from the vehicle as shown.

9. Remove the air box retaining bolt shown.

10. Pull firmly on the air box to dislodge it from the mounting grommets and remove it from the vehicle.
NOTE: K&N Engineering, Inc., recommends that customers do not discard factory air intake.

11. Remove the two air box mounting studs shown from the inner fender.

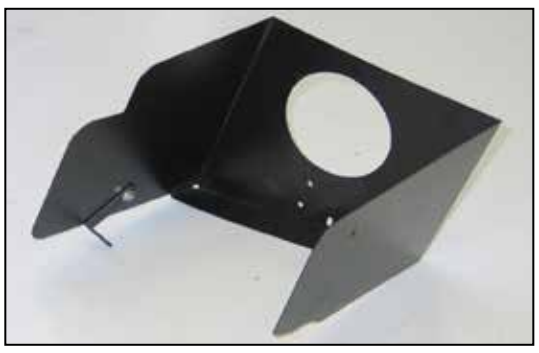

12. Install "L" Bracket (070632) onto the heat shield with the provided hardware.

13. Install the "L" bracket (010051) onto the heat shield as shown with the provided hardware.

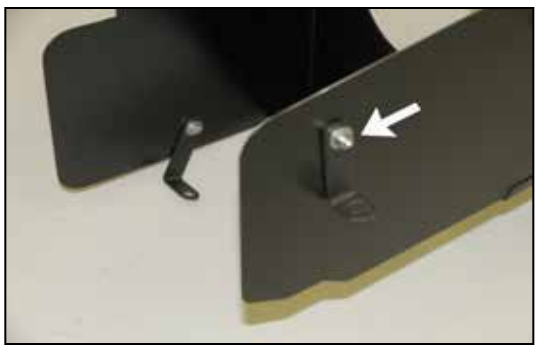

14. Install the "L" bracket (07805) onto the heat shield as shown with the provided hardware.

15. Install the edge trim onto the heat shield as shown.
NOTE: Some trimming of the edge trim may be necessary.

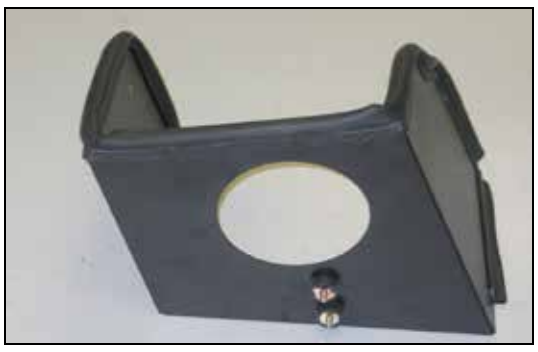

16. Install the provided rubber mounted studs onto the heat shield using the supplied hardware.

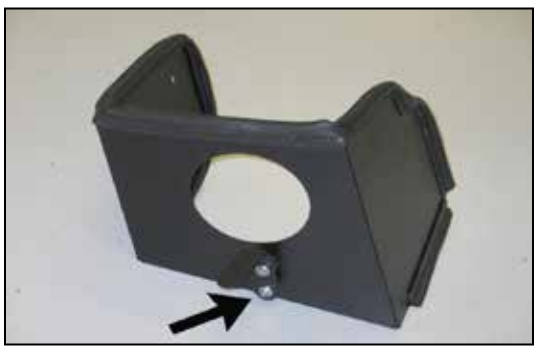

17. Attach the provided "C" bracket (070106) to the rubber mounted studs installed in the previous step using the provided hardware.

18. Remove the bolt, which secures the ground strap to the inner fender.
NOTE: This bolt will not be reused.

19. Install the heat shield assembly into the vehicle and secure with the provided hardware.
NOTE: Secure the ground strap removed in step #18 onto the lower heat shield mounting bracket.

20. Install the silicone hose (08434) onto the throttle body and secure with the provided hose clamp.

21. Remove the two screws, which secure the mass air sensor to the stock air box and then remove the mass air sensor from the air box.

22. Install the mass air sensor into the K&N® intake tube and secure with the screws removed in step #21 and the provided spacers.

23. Install the K&N® intake tube into the silicone hose at the throttle body and align with the tube mounting bracket installed in step #16. Secure with the provided hardware and hose clamp.

24. Attach the provided crank case vent hose to the valve cover and K&N® intake tube as shown and secure with the provided hose clamps.

25. Install the filter adapter into the air filter as shown and secure with the provided hose clamp.

26. Install the silicone hose (08698) onto the air filter as shown and secure with the provided hose clamp.

27. Install the air filter assembly onto the intake and secure with the provided hose clamp.

28. Reinstall the engine cover removed in step #4 and secure with the factory mounting bolts.

29. Reconnect the mass air sensor electrical connection.

30. Reconnect the vehicle's negative battery cable. Double check to make sure everything is tight and properly positioned before starting the vehicle.

31. It will be necessary for all K&N® high flow intake systems to be checked periodically for realignment, clearance and tightening of all connections. Failure to follow the above instructions or proper maintenance may void warranty.

ROAD TESTING:

1. Start the engine with the transmission in neutral or park, and the parking brake engaged. Listen for air leaks or odd noises. For air leaks secure hoses and connections. For odd noises, find cause and repair before proceeding. This kit will function identically to the factory system except for being louder and much more responsive.

2. Test drive the vehicle. Listen for odd noises or rattles and fix as necessary.

3. If road test is fine, you can now enjoy the added power and performance from your kit.

4. K&N Engineering, Inc., requires cleaning the intake system's air filter element every 100,000 miles. When used in dusty or off-road environments, our filters will require cleaning more often. We recommend that you visually inspect your filter once every 25,000 miles to determine if the screen is still visible. When the screen is no longer visible some place on the filter element, it is time to clean it. To clean and re-oil, purchase our filter Recharger® service kit, part number 99-5050 or 99-5000 and follow the easy instructions.

NOT LEGAL FOR SALE OR USE ON ANY POLLUTION CONTROLLED MOTOR VEHICLE IN CALIFORNIA OR STATES ADOPTING CALIFORNIA EMISSION PROCEDURES.

See knfilters.com for CARB status on each part for a specific vehicle

• 1455 CITRUS ST., P.O. BOX 1329, RIVERSIDE, CA., U.S.A. 92502 • TECH SERVICE 800-858-3333 • FAX 951-826-4001
• e-mail: tech@knfilters.com® • WWW: http://www.knfilters.com®

18329V
11/16/16